Magnecraft™ General Purpose Relays

Socket Specifications
70-378-1 and 70-379-1

Socket Specifications

Part Number	70-378-1	70-379-1
Contact Configuration	4PDT	4PDT
Number of Terminals	14	14
Mounting Style	Chassis	PCB
Current Rating	5 A	5 A
Nominal Voltage Rating	120 V	120 V
Temperature Storage Range	-40 – +105 °C (-40 – +221 °F)	-40 – +105 °C (-40 – +221 °F)
Protection Category (Finger-safe™)	–	–
Internal Metal Tracks	Copper Alloy, Zinc Plated	Copper Alloy, Zinc Plated
Screw Terminals	Copper Alloy, Zinc Plated	Copper Alloy, Zinc Plated
Screw Style	–	–
Screw Size	–	–
Maximum Screw Torque	–	–
Terminal Connection	Solder	PCB
Terminal Layout	Mix	Mix
Maximum Wire Size	**Solid Cu:** (Output): 18 AWG, 0.8 mm² **Stranded Cu:** (Output): 18 AWG, 0.8 mm²	–
DIN Rail Mounting, EN 60715	35 mm	–
Chassis Mount Screw Torque	7 Lb-in / 0.8 N•m	–
Flammability Rating	94V-0	94V-0
Weight	6.2 g (0.22 oz)	5.8 g (0.20 oz)
Agency Approvals	UL (E70550), CE, CSA (LR40787), RoHS	UL (E70550), CE, CSA (LR40787), RoHS

Dimensions — inches (millimeters)

70-378-1

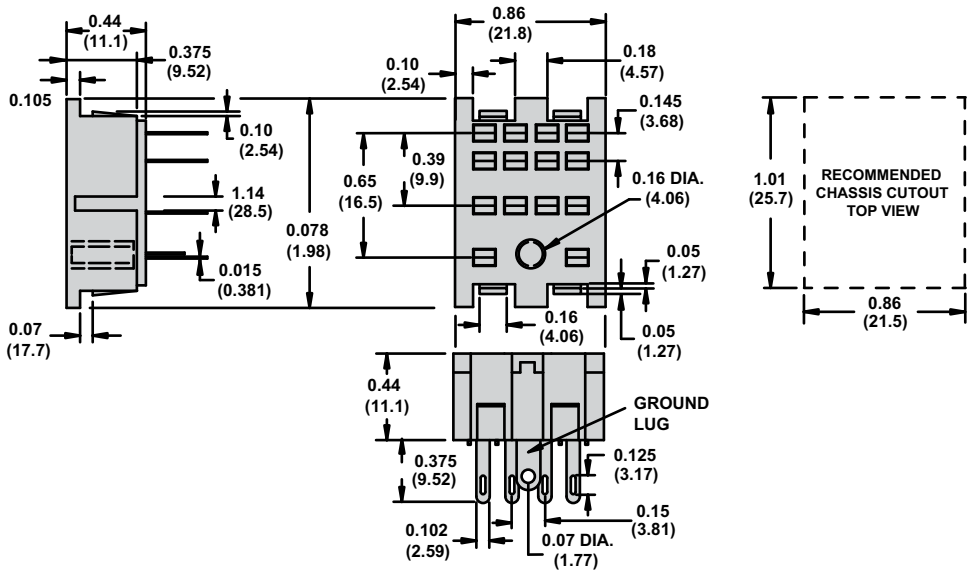

Dimensions — inches (millimeters)

70-379-1

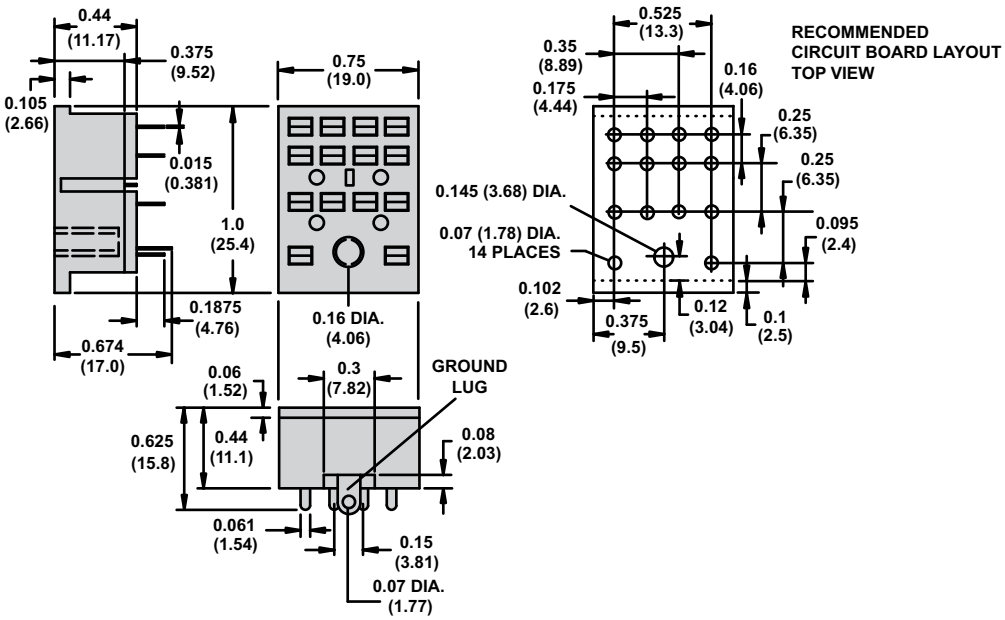

Wiring Diagrams

70-378-1

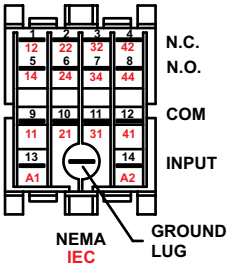
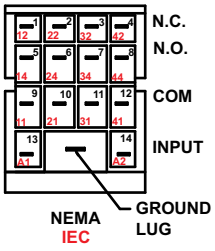
70-379-1